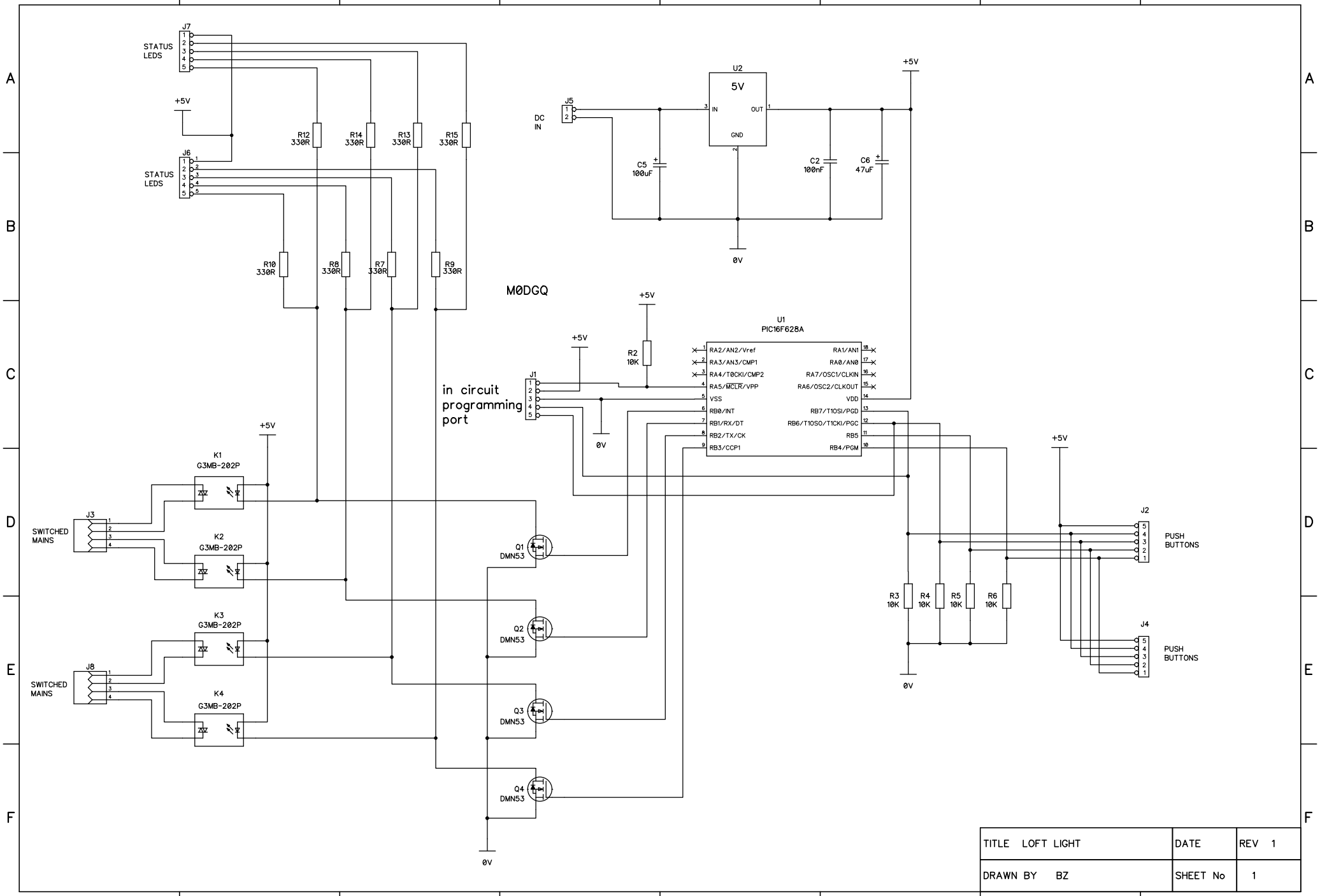

TITLE LOFT LIGHT	DATE	REV 1
DRAWN BY BZ	SHEET No	1